HAL
open science

Runaway reaction. Development of a new experimental vent sizing tool for non tempered systems at the laboratory scale

Jean-Pierre Bigot, Luc Vechot, Danièle Testa, Claudia Noguera, Wilfried Minko, Marc Kazmierczak, Patricia Vicot

To cite this version:

Jean-Pierre Bigot, Luc Vechot, Danièle Testa, Claudia Noguera, Wilfried Minko, et al.. Runaway reaction. Development of a new experimental vent sizing tool for non tempered systems at the laboratory scale. 12. International Symposium on Loss Prevention and Safety Promotion in the Process Industry, May 2007, Edimbourg, United Kingdom. pp.7. ineris-00976183

HAL Id: ineris-00976183

https://ineris.hal.science/ineris-00976183v1

Submitted on 9 Apr 2014

HAL is a multi-disciplinary open access archive for the deposit and dissemination of scientific research documents, whether they are published or not. The documents may come from teaching and research institutions in France or abroad, or from public or private research centers.

L'archive ouverte pluridisciplinaire **HAL**, est destinée au dépôt et à la diffusion de documents scientifiques de niveau recherche, publiés ou non, émanant des établissements d'enseignement et de recherche français ou étrangers, des laboratoires publics ou privés.

RUNAWAY REACTION: DEVELOPMENT OF A NEW EXPERIMENTAL VENT SIZING TOOL FOR NON TEMPERED SYSTEMS AT THE LABORATORY SCALE

J.-P. Bigot[1], L. Véchot[1], D. Testa[1], C. Noguera[1], W. Minko[1], M. Kazmierczak[2] and P. Vicot[2]
[1]Centre SPIN, École nationale supérieure des mines de Saint-Étienne, 158 cours Fauriel, 42100 SAINT-ETIENNE, France;
e-mail: bigot@emse.fr, vechot@hotmail.fr, Daniele_Testa@libero.it, claudia_noguerag@yahoo.es, Minko@emse.fr
[2]Laboratoire d'Evaluation des Matières Dangereuses, Direction de la Certification, Institut national de l'environnement industriel et des risques (INERIS), Parc Alata, BP2, 60550 VERNEUIL EN HALATTE, France;
e-mail: Marc.Kazmierczak@ineris.fr, Patricia.Vicot@ineris.fr

In order to protect chemical reactors from runaway reactions, vent sizing methods, based on data obtained from adiabatic calorimetry and two-phase flow models, were built under the guidance of the DIERS (Design Institute for Emergency System Relief). Nevertheless, because of the simplifying assumptions used (mainly conservation of initial reactive mass and homogeneous vessel venting), DIERS methods often lead to unrealistically large vent areas. This is especially the case of non tempered systems (gas-generating and hybrid systems, peroxide decomposition for example).

The United Nation Manual of Test and Criteria (UN) also proposes an experimental method to determine the minimum required vent area using a 10 dm^3 vessel test. The vent area is scaled up on vessel volume. Prior mass loss and two phase flow being experimentally taken into account, this method provides a more realistic vent size.

This type of area to volume scale up can be conservative in the case of non tempered systems because the mass loss at small scale is more important.

Nevertheless, due to the fact that the sample size is large, the UN method has the disadvantage of being time consuming, laborious and requires heavy safety precautions.

This article is about the development of a new experimental vent sizing tool for non tempered system combining the advantages of DIERS method (laboratory scale) and UN method (less over-conservative). This new tool consists of an extension of the adiabatic calorimeter Vent Sizing Package II (VSP2).

The reactor in which chemical runaway reaction occurs is the "VSP2 blowdown test cell". In order to simulate the relief system the test cell is connected to a main vent line comprising of regulating valves which allow the simulation of "equivalent ideal orifice" area by volume ratios lying between 10^{-4} and 5.10^{-3} m^{-1}. A feed bleed system is also installed. The assessment of the vented mass from the test cell is done by adding at the end of the main vent line a glass column half filled with water. During the relief the chemical products are vented in the column (quench of the reaction is realised at the same time) leading to an increase in the differential pressure at the bottom of the column. The initial VSP2 device has also been modified in terms of the rate of pressure rise and fall to allow for these kinds of blowdown experiments.

This new device was tested by running the decomposition of cumene hydroperoxide in 2,2,4-trimethyl-1,3-pentanediol diisobutyrate which is a non tempered system. Pressure evolution and the vented mass profile obtained are presented. The influence of several parameter (A/V ratio, the initial fill level, feed bleed opening) is also observed.

However, heat losses at small scale are much more important, so working in fire simulation mode is generally preferred over the adiabatic mode. This also means that the study of tempered system appears difficult. This method can not be used with initial fill level superior to 80%. It is not adapted to violent runaway reaction (for example very concentrated peroxide solutions).

KEYWORDS: vent sizing, untempered reaction, runaway reaction, similarity, cumene hydroperoxide (CHP), adiabatic calorimeter, blowdown experiment, mass loss, non tempered system

INTRODUCTION

Vent sizing methods, based on data obtained from adiabatic calorimetry and two-phase flow models, were designed by the DIERS (Design Institute for Emergency System Relief) in order to protect chemical reactors from runaway reactions. Nevertheless, these methods can lead to too oversized vent areas, especially for untempered systems (gas-generating and hybrid systems, peroxide decomposition for example). DIERS vent area can be overestimated by one order of magnitude for xperoxide decomposition runaway reaction [Fauske 2000].

More realistic vent areas are obtained using a "similarity method" such as that proposed by the United Nation Manual of Test and Criteria (UN) for the transportation of peroxide chemicals [Appendix 5]. This latter method has however the disadvantage of being time consuming, laborious and requiring heavy safety precautions because it involves a 10 litre decomposition.

This paper proposes a new similarity vent sizing tool combining the advantages of both DIERS method (laboratory scale) and UN method (less overconservative). This tool allows blowdown experiments to be carried out at laboratory scale. The objectives are both direct determination of the required vent area and real time measurement of the vented mass during relief. This latter will enable a better understanding of blowdown.

NEW "SIMILARITY VENT SIZING TOOL" FEATURES

This tool is an extension of the adiabatic calorimeter VSP2. The reactor in which chemical runaway reaction occurs is the "VSP2 blowdown test cell". The extension of the VSP2 consists in the addition of both a feed bleed and a safety relief system plus the addition of a vented mass measurement device.

ADDITION OF RELIEF SYSTEM

Two venting systems generally exist on chemical reactors or storage vessels:

- a feed bleed system which is designed to avoid pressure changes when filling or emptying the capacity. This feed bleed system is supposed to vent only gas.
- a rupture disc or a safety valve, which is designed to open when the pressure in the reactor reaches the vent set pressure (P_s).

During a runaway reaction, gases produced by the reaction are first vented via the feed-bleed system. This flow maintains pressure in the reactor close to the atmospheric pressure. Then pressure in the reactor starts to increase when volumetric gas generation rate becomes greater. The rupture disc opens when pressure in the reactor reaches P_s.

In the new vent sizing tool, the rupture disc is simulated by a *relief vent line* and the feed bleed system by a feed bleed line. Both lines are composed of a ball valve and a safety valve.

Relief vent line

The relief vent line is connected to the outlet of the blowdown test cell outside of the VSP2 containment vessel (Figure 2). This line is made of 1/8″ stainless steel tube (inner diameter = 1,76 mm). The line includes an actuated 1/8″ ball valve ($C_V = 0.2$) followed by a 1/8″ metering valve (needle valve) ($C_V = 0–0.03$).

When pressure in the test cell reaches set pressure P_s, an opening signal is sent by the VSP2 software to the ball valve actuator. By this way, the test cell is open to the atmosphere. Contents of the test cell are vented through the metering valve. Venting flow is a function of the metering valve opening.

Feed bleed line

The feed bleed line is installed in parallel to the relief vent line (Figure 2). It's also made of 1/8″ stainless steel tube and includes a manual 1/8″ ball valve followed by a 1/8″ metering valve (needle valve). The ball valve is always "open" during a runaway experiment.

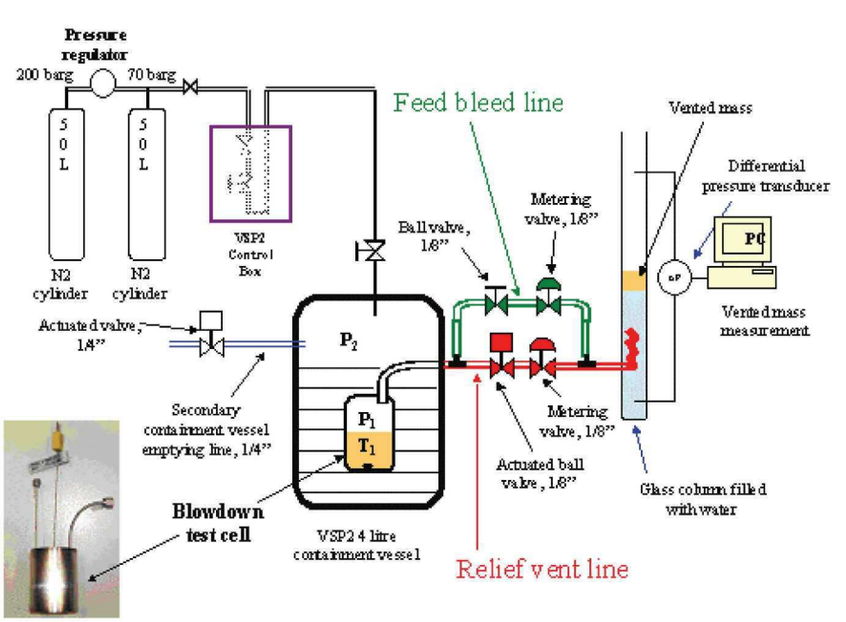

Figure 1. New similarity vent sizing tool

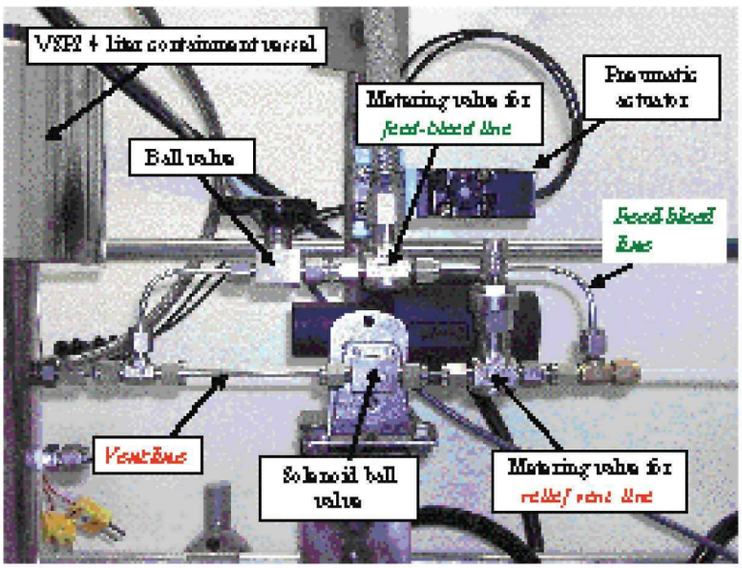

Figure 2. Picture of relief system

ADDITION OF A VENTED MASS MEASUREMENT SYSTEM (FIGURE 3)

The vented mass measurement device is composed of a glass column (1 metre high, inner diameter = 5 cm) partially filled with water. The relief vent line is ended with a PTFE perforated tube which is immerged in the column water in order to obtain small bubbles. A relative pressure transducer (0–100 mbar) is connected to the bottom of the column.

During the relief, chemicals are vented through the column (quench of the reaction is realized at the same time). Gas is ejected while liquid and condensable matters are collected at the top of the water. This leads to an increase of the relative pressure at the bottom of the column. The PTFE perforated tube reduces noises on pressure measurement.

Assuming that vented mixture is not miscible with water, $\Delta P_{measured}$ is translated to vented mass measurement

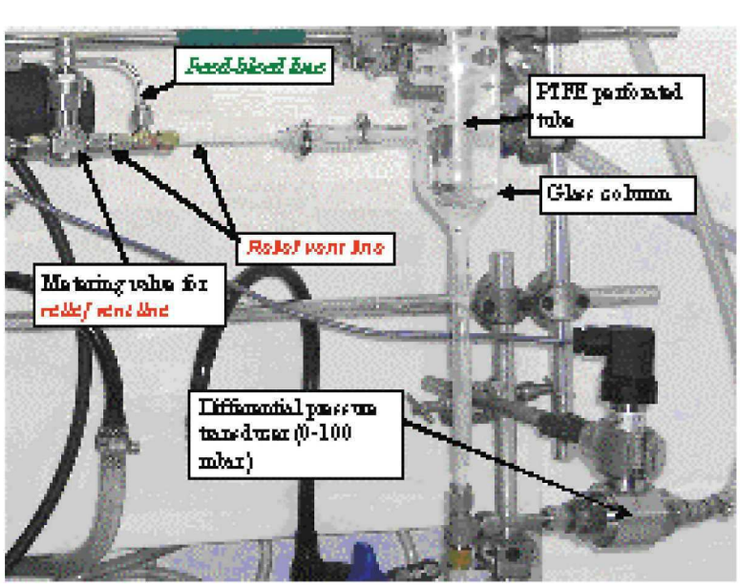

Figure 3. Picture of vented mass measurement system

(Δm) by the following formula:

$$\Delta m = \rho_{\text{mixture}} \Delta h_{\text{mixture}} A_{\text{column}}$$
$$= A_{\text{column}} \left(\frac{\Delta P_{measured} - \Delta P_0}{g} \right) \quad (1)$$
$$\frac{\Delta m}{m_0} = \frac{A_{\text{column}}}{m_0} \left(\frac{\Delta P_{measured} - \Delta P_0}{g} \right) \quad (2)$$

Δh: height of vented chemical mixture in the glass column
A_{column}: glass column cross section
ΔP_0: initial differential pressure (due to water)

TEST OF THE "SIMILARITY VENT SIZING TOOL": CHP RUNAWAY EXPERIMENTS

The new vent sizing device was tested by running non tempered system runaway experiments. The decomposition of cumene hydroperoxide (CHP), which produces non condensable gases, was chosen.

CHEMICAL SYSTEM AND RUNAWAY SCENARIO

80% (w/w) CHP solution in cumene was diluted in a high boiling point solvent: 2,2,4-trimethyl-1,3-pentanediol diisobutyrate. The composition of the chemical system is thus (w/w): 30% CHP, 7.5% cumene, 62.5% 2,2,4-trimethyl-1,3-pentanediol diisobutyrate.

High boiling point of both peroxide and solvent is the criterion which allowed us to consider this system as untempered (CHP: 116°C at 0.02 bar, solvent: 280°C at 1.013 bar). A temperature increase rate of 0.5°C/min simulates a fire scenario.

EXPERIMENTAL PROCEDURE

Blowdown experiments procedure is as follows:

- Assembly of the test cell according to VSP2 documentation.
- Vent line characterization.
- Filling of reactant in test cell.
- *Feed-bleed line* opening.
- *Guard heater* activation (will always be activated to limit heat losses).
- Heating of the sample 20°C à SADT + 5°C (= 85°C) by *main heater.*
- Fire simulation: from 85°C heating of the sample (constant heating power until the end of the runaway reaction corresponding to 0,5 °C/min).
- *Relief vent line* opening when test cell pressure reaches set pressure P_s.

RESULTS

Figure 4 presents a 30% CHP runaway experiment with similarity vent sizing tool. Test cell pressure (P1) and liquid temperature (T1) histories are plotted. The experimental conditions are:

- Initial reactant mass: 79 g.
- Test cell volume = 125 cm^3.
- Initial fill level = 65% (v/v).
- Relief vent line: A/V = 1.36 x 10^{-3} m^{-1} (3 turns opened).
- Feed bleed line metering valve = 3/8 turn opened.

The whole experiment lasts approximately 3 hours. The runaway period is relatively short (a few minutes). Figure 5 shows a zoom for pressure, temperature and vented mass profiles during the relief period for the same runaway experiment.

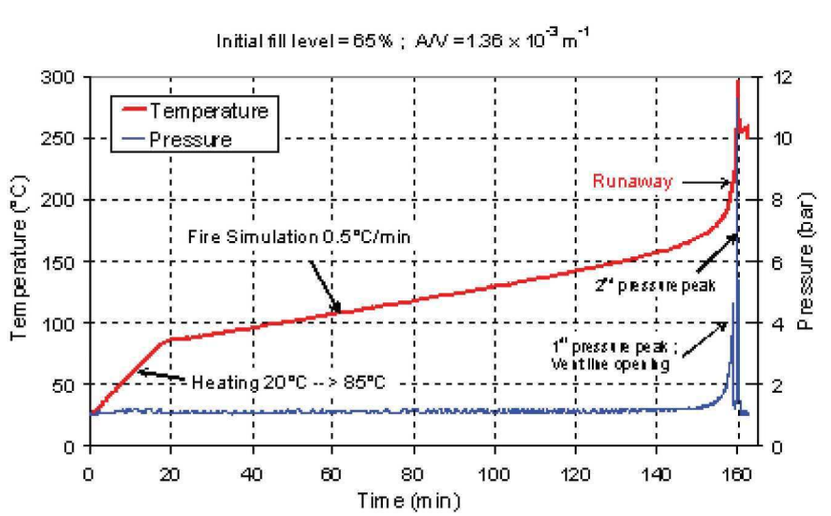

Figure 4. Whole 30% CHP runaway experiment with test cell blowdown

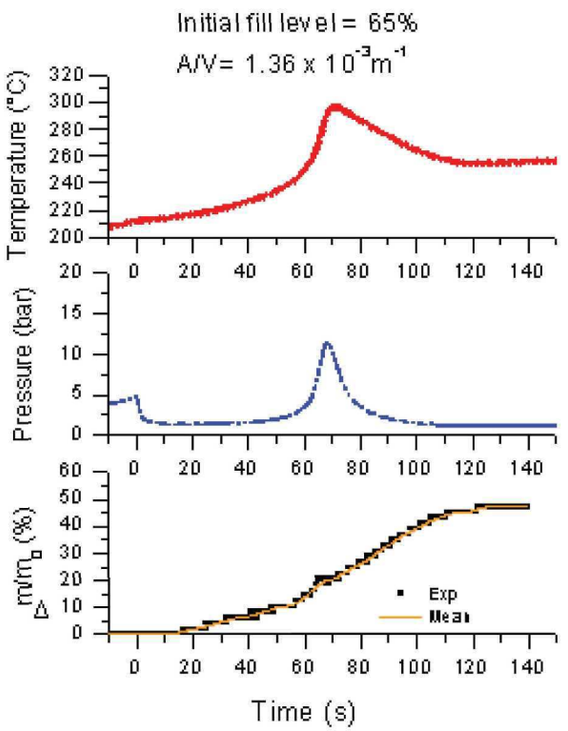

Figure 5. 30% CHP runaway experiment: relief period (time 0 corresponds to relief vent line opening)

We can observe two pressure peaks. This is typical for untempered systems. The first one corresponds to relief vent line opening. It has no obvious influence on temperature profile. This behavior confirms that the chemical system is untempered. Dynamic vented mass was measured. 20.4% of initial mass was vented at turnaround.

LIMITS OF THE NEW VENT SIZING TOOL AND ACHIEVEMENT OF SIMILARITY

Our device presents some technical limits. Some of these limits have consequences on the achievement of the similarity concerning hydrodynamic and reaction kinetics.

Technical limits

The following technical limits were observed:

- Working with concentrated peroxide can lead to cell volume swell (uncertainties on A/V) or even to cell failure.
- Limited range of equivalent ideal nozzle diameter can be simulated (between 10^{-3} m^{-1} and 3.5 10^{-3} m^{-1}).
- The use of metering valve is convenient (easy to change A/V) but not ideal: vent line has to be characterized before each experiment because of aging.
- When initial fill level is higher than 80 %, liquid enters the feed bleed line (which is supposed to vent only gas)

Technical solutions can probably be found in the future to solve these problems.

Achievement of similarity

The use of a similarity method is not conservative for tempered systems [Fauske, 1985]. This is the reason why our tool is only devoted to untempered systems. The achievement of similarity is however delicate.

Hydrodynamic similarity

We can distinguish three aspects of hydrodynamic similarity:

- *Similarity of the level swell inside the reactor.* The vented mass is less important at small scale than at large scale [Fauske, 1985]. So the similarity of level can not be reached! This however means that at small scale, the relative remaining mass at turnaround is greater than at large scale. This leads to a more violent pressure rise rate. This difference in the level swell makes the new tool to be conservative.
- *Similarity of the venting flow through the vent.* The metering valve in the relief vent line has a complex geometry, very different of an ideal nozzle. To obtain an equivalent ideal nozzle diameter we assumed that the viscous dissipation phenomena introduced by this complex geometry is the same for a gas flow than for a two-phase flow. This needs more investigations.
- Moreover, similarity of the flow through the vent needs mass flux (G) to be independent of vent area. Several authors [Fletcher, 1984; Van den Akker *et al.*, 1984; Ogasawara, 1969; Kevorkov *et al.*, 1977; Marviken, 1979] showed that this is true for vent diameter from 3.2 mm to 500 mm. There are however no studies for smaller diameters. In the case of the similarity tool, the vent line pipe has an inner diameter equal to 1.76 mm. Capillarity effect could appear and so lead to decrease of the mass flux. This would, once again, make the similarity tool to be conservative.
- *Similarity of the gas venting flow through the feed bleed system.* Gas venting capacity of the feed bleed system has direct influence on temperature at vent opening (T_s). For an untempered system, if T_s at small scale is smaller than T_s at large scale, vented mass at turnaround can be more important at small scale, leading to a lower P_{max}. With the similarity tool, a good simulation of the feed bleed system is quite difficult. A feed bleed line settings which allows a vent opening temperature equal or greater to that for a large scale vessel is necessary in order to be conservative.

Globally, when hydrodynamic similarity is not achieved, the similarity vent sizing tool is conservative.

Kinetics (or thermal) similarity

Heat exchanges have to be similar at both scales in order to obtain similarity of reaction kinetics. For our tool, the following points can influence this similarity:

- Heat losses at small scale can be much more important compared to industrial large scale [Friedel et al., 2000] because of surface to volume ratio.
- Reactant mass in the test cell decreases during blowdown. This leads to an increase of the adiabaticity factor (ϕ).
- We ran 15% CHP (w/w) adiabatic runaway reaction with both a closed test cell and a plugged blowdown test cell (plug outside the containment vessel). We observed that dT/dt obtained with the plugged blowdown test cell is lower than the one obtained with the closed test cell (factor of 3 !, Table 1). This means that addition of a vent line to the VSP2 calorimeter generates additional heat losses which can be important in adiabatic mode. We did the same adiabatic tests using a plugged blowdown test cell with a PTFE outlet tube. The decrease of dT/dt was almost unchanged. This let us think that heat losses do not come from conduction phenomena but from presence of vaporisation/condensation phenomena. The same experiments for a fire scenario (dT/dt = 0,5°C/min) with or without the blowdown line led to almost identical dT/dt measurements. The thermal bridge effect is masked when external heat flux is added.

It has to be verified that thermal bridge has negligible effect on chemical kinetics before any blowdown experiment with the similarity tool. This tool is not relevant for systems which generate much vapour and for scenarios with a low heat input.

These limits are undoubtedly the most severe ones for this tool. They could lead to less violent runaway reactions at small scale and so an unsafe A/V prediction.

CONCLUSION AND PERSPECTIVES

A new similarity vent sizing tool combining the advantages of both DIERS method (laboratory scale) and UN method (less overconservative) was built by extending VSP2 adiabatic calorimeter. This tool allows blowdown experiments to be carried out at laboratory scale. It was tested with CHP 30% (w/w) in 2,2,4-trimethyl-1,3-pentanediol diisobutyrate.

Table 1. 30% CHP runaway experiments in closed test cell and plugged blowdown test cell: comparison between adiabatic and fire simulation modes

		$(dT/dt)_{max}$	$(dP/dt)_{max}$
Mode	Test cell type	°C/s	bar/s
Adiabatic	closed	1.67	0.5
	Plugged blowdown	0.56	0.18
	Closed	5.3	1,9
Fire simulation	Plugged blowdown	5	1.65

Dynamic mass vented measurement was obtained. That is the second main point of the similarity tool. However the following work has still to be done in order to improve the capacity of the similarity tool:

- improvement of vented mass measurement resolution,
- extension of equivalent diameter range by increasing the relief line size,
- use of calibrated orifices for a better simulation of relief vent line and feed bleed line,
- reduction of heat losses in order to allow for adiabatic tests,
- study of vapour and heat losses effect on small scale blowdown measurements for domain of use determination.

Validation experiments will be done by comparison with blowdown experiments at the 10 l scale. An future paper will discuss the behaviour of non tempered system based on vented mass measurement and specific behaviour of CHP system.

NOMENCLATURE

A:	Vent area (m^2)
m:	Reactant mass in the vessel (kg)
P1:	Pressure in the test cell (bar)
P_{max}:	Pressure at turnaround (bar)
P_s:	Vent opening pressure (bar)
T:	Temperature (K)
Δm:	Vented chemical mixture mass
Δh:	Height of vented chemical mixture
ρ:	Reactor contents density (kg/m^3)
ϕ:	Adiabaticity factor

SUBSCRIPTS

c:	Containment vessel
column:	Glass column
g:	Gas
mixture:	Chemical mixture
0:	Initial conditions

REFERENCES

Appendix 5 of "Recommendations on the Transport of Dangerous Goods, Manual of Test and Criteria" http://www.unece.org/trans/danger/publi/manual/manual_e.html

Fauske, H.K., 1985, Emergency Relief System (ERS) Design, Chem. Eng. Prog., 81: 53–56.

Fauske, H.K., 2000, Properly size vents for non reactive and reactive chemicals, Chem. Eng. Prog., 96: 17–29.

Fletcher, B., 1984, Flashing flow through orifices and pipes, Chem. Eng. Prog., 80: 76–81.

Friedel, L., Korfmann, S., 2000, Predictive accuracy of simplified vent area sizing methods for the case of thermal runaway reactions, J. loss prev. process ind., 13: 125–152.

Kevorkov, L. R., Lutovinov, S. Z., Tikhonenko, L. K., 1977, Influence of the scale factor on the critical discharges of saturated water from straight tubes with a sharp inlet edge, Thermal Engineering, 24: 58–61.

Marviken Full Scale Critical Flow Tests (The), 1979, Third series. Results from test 24 Joint Reactor Safety Experiments in the Marviken Power Station Sweden.

Ogasawara, H., 1969, A theoritical approach to two-phase critical flow. 4th report: Experiments on saturated water discharging through long tubes, bulletin of A.S.M.E., 12 (52), 837–846.

Van Der Akker, Bond, W. M., 1984, Discharges of satured and superheated liquids from pressure vessels. Prediction of homogeneous choked two-phase flow through pipes, IchemE symposium series N°85, 91–108.