HAL
open science

Artifact formation in high volume sampling of voc's and solid organic compounds

Eva Leoz-Garziandia, Angels Castellnou, Norbert Gonzalez-Flesca, Patrick Carlier

To cite this version:

Eva Leoz-Garziandia, Angels Castellnou, Norbert Gonzalez-Flesca, Patrick Carlier. Artifact formation in high volume sampling of voc's and solid organic compounds. 2. International Conference "Volatile Organic Compounds in the Environment", Nov 1995, Londres, United Kingdom. pp.107-116. ineris-00971954

HAL Id: ineris-00971954

https://ineris.hal.science/ineris-00971954

Submitted on 3 Apr 2014

HAL is a multi-disciplinary open access archive for the deposit and dissemination of scientific research documents, whether they are published or not. The documents may come from teaching and research institutions in France or abroad, or from public or private research centers.

L'archive ouverte pluridisciplinaire **HAL**, est destinée au dépôt et à la diffusion de documents scientifiques de niveau recherche, publiés ou non, émanant des établissements d'enseignement et de recherche français ou étrangers, des laboratoires publics ou privés.

ARTIFACT FORMATION IN HIGH VOLUME SAMPLING OF VOC's AND SOLID ORGANIC COMPOUNDS.

Eva LEOTZ GARTZIANDIA[1], Angels CASTELLNOU[1], Norbert GONZALEZ-FLESCA[1]* and Patrick CARLIER[2]

1.INERIS, Parc Technologique Alata, B.P. 2, 60550 Verneuil-en-Halatte, France
2.Laboratoire Interuniversitaire des Systèmes Atmosphériques, Boîte 7059, UNIVERSITE PARIS 7, 2, place Jussieu, 75251 PARIS Cédex 05

ABSTRACT

Pollutants from vehicle emissions and many other combustion sources at ambient temperature, include gaseous (VOC's) as well as solid (SOC's) organic compounds. High volume samplers are commonly used in air quality monitoring especially in urban areas. Equipment commercially available is able to collect the gaseous and the solid fractions of an ambient air sample. Nevertheless the quality of the sample can be seriously degraded by the presence of co-pollutants. This work outlines the artifact formation by evaporation and chemical reaction of ozone with some atmospheric PAH's. It is shown that the PUF back up leads to a good recovery only in over exposure experiments with purified air. However recoveries become poor and variable when sampling polluted air.

Purified air containing 180 ppbv ozone seems to destroy PAH according to already published reactivity scales.

It appears that a number of complex and unmastered physicochemical phenomena take place in a high volume sampling. The problem of the reliability of such measurements is raised.

KEY WORDS

PAH, airborne particles, artifacts, high volume sampling.

ABREVIATIONS

AC	Acenaphthene	BbF	Benzo(b)fluoranthene
ACE	Acenaphthylene	BghiP	Benzo(g,h,i)perylene
ANT	Anthracene	BkF	Benzo(k)fluoranthene
BaA	Benzo(a)anthracene	CHR	Chrysene
BaP	Benzo(a)pyrene	COR	Coronene

Second International Conference "Volatile Organic Compounds in the Environment", Londres, 7-9 novembre 1995, p. 107-116

DBahA	Dibenzo(a,h)anthracene	PAH	Polycyclic Ar. Hydroc.
EPA	Env. Prot. Agency	PHE	Phenanthrene
FL	Fluoranthene	PUF	Polyurethane foam
FLN	Fluorene	PY	Pyrene
IP	Indeno(1,2,3-cd)pyrene	SOC	Solid Organic Comp.
NAP	Naphthalene	VOC	Volat. Organic Comp.

INTRODUCTION

Large amounts of organic matter are introduced into the atmosphere from industrial activities, transport, natural and even domestic sources. However, one can consider as pollutants only those compounds that are able to produce some measurable effect on humans, animals, plant life or materials (1). Several of these compounds have been subject to control because their primary toxicity or their role in secondary pollutants formation.

Organic compounds in the troposphere are gaseous (VOC's) or solids (SOC's) at ambient temperature. The phase partitioning of these compounds at emission will be transformed once in the atmosphere through a number of physicochemical transformations including photochemical reactions. This ability to transform will lead during sampling to modification in the sample composition. Such modifications are called artifacts. The phase partitioning is important since it dictates the pollutants life time hence their transport range and accumulation in the atmosphere. These facts are directly linked to health risks (2).

Polycyclic Aromatic Hydrocarbons (PAH's) is a chemical group that has generated a great interest. They are produced during the combustion of organic material. Thus there are numerous PAH's sources such as the combustion of coal, petrol, diesel, wood but also incineration plants. The systematic occurrence of certain PAH's can be useful when characterising emission sources e.g. PHE, FL and PYR are predominant in diesel emissions while BaP, IP and COR are commonly found in petrol fueled vehicle emissions (3).

PAH molecular structure consists of between two and ten hydrocarbon rings (mainly aromatics). Even though the number of PAH that can be found in the atmosphere is large, regulatory bodies tend to focus their concern according to human health risk, probability to produce environmental transformations and or metabolic alterations (4). In some cases the PAH toxicity, mutagenicity and carcinogenicity have been documented (5-7). Most of the PAH studied here are those of the EPA method TO-13 (8).

In addition to health concerns, PAH's are known to participate in tropospheric chemistry (9) since they can react with many species present such as NO2, (5,10, 11), O3 (12). From this chemistry, a qualitative reactivity scale has been established (5,9):

BaP>ANT>DBahA>BaA>BeP>PY>BkF>BbF

Apart from PAH, many other molecules are present in the organic fraction of airborne particles (aliphatic hydrocarbons, polar compounds, etc).

Aliphatic hydrocarbons are molecules containing 16 to 36 carbon atoms. They are commonly found in urban atmospheres (13).

Polar compounds are mainly alcohols, organic acids and their derivatives containing chains of 14 to 32 carbon long. While less attention has been paid to this fraction, it has been shown that respiratory disorders are related to an increase of concentration of high molecular weight alcohols (14).

EXPERIMENTAL

Considering that SOC's and VOC's coexist, the sampling equipment should be able to collect both phases. Apparatus used in this study is illustrated in figure 1.

It consists of a metallic conical holder supporting the front filter (Whatman quartz fiber 10.16 cm diameter, 99.99 % efficiency for 0.3 μm particulates) to collect particles, followed by a glass cartridge containing a back up adsorbent (PUF, 6.4 cm D. and 8 cm heigh). A volume of about 100 m3 is drawn through the holder by an electrically driven turbine at a typical flow rate of 13 m3/h. The whole assembly is contained in an aluminium cabinet.

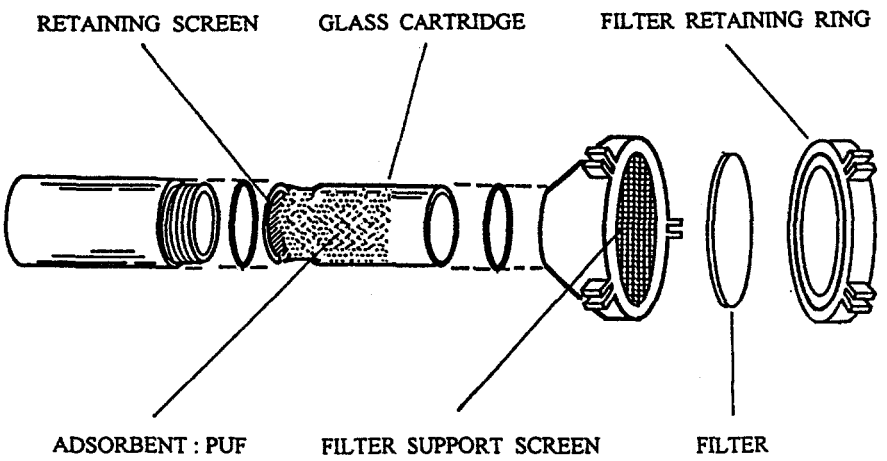

Figure 1.High volume sampler holder.

Purified air for over exposure and ozone reaction experiments was obtained from an air generator fully described elsewhere (18). The air generator filter is shown in figure 2.

Ozone air stream was generated by high voltage discharge in oxygen. Ozone concentration was measured by an U.V. absorption ozone analyser.

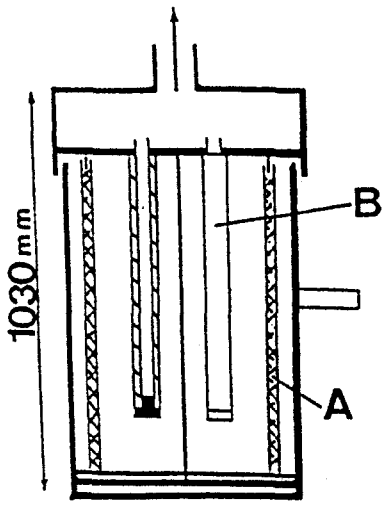

Figure 2. Air generator filter.
A: 10 kg activated charcoal
B: glass microfiber filter.

Samples preparation

Laboratory materials such as silica gel, alumina, Soxhlet cartridges and PUF were extracted with dichloromethane for 48 h prior to use.

After sampling, PUF and filter were frozen at -4°C until analysis in the laboratory. Then they were Soxhlet extracted with dichloromethane for 24 h. The extract was vacuum and nitrogen evaporated until near dryness and diluted to 1 ml with dichloromethane, then fractionated by column chromatography. A column filled with 1 g each of 5% water-deactivated alumina (top) and silica (bottom) was used. The aliphatic hydrocarbons were obtained in the first fraction (4 ml of n-hexane), and the aromatic hydrocarbons were collected in the second fraction (4 mL of 20% dichloromethane in n-hexane). These two fractions were nitrogen concentrated almost to dryness and the residue dissolved in 1 ml dichloromethane. This method has been successfully used in previous studies (19-21).

Instrumental analysis

The samples were analysed by GC-FID, with a Carlo Erba Model 5300 gas chromatograph equipped with a flame-ionization detector and a splitless injector. Capillary column was a 30m x 0.32 mm i.d. PTE-5 (surface film thickness 0.25 μm). Helium was the carrier gas (1,7 cc/min). The injector and the detector temperatures were 250° and 300°C respectively. The injection was in the splitless mode (hot needle technique). The oven temperature program was as follows: 35°C (1 mn)-5°/min -250°C- 2.5°/min-255°C-3°/min-300°C (15 min).

RESULTS AND DISCUSSION

Several experiments were carried out in a systematic way in an order of increasing complexity ranging from simple injection repeatability study to a field campaign including the full analytical protocol. This was done in the aim of highlighting the artifact formation.

Injection repeatability

In order to assess the chromatographic technique a series of seven injections of a 16 PAH standard mixture was performed. The chromatogram is shown in figure 3. The relative standard deviations of peak areas ranged between 5 % and 20% with a half better than 10%. Taking into account that samples were manually injected , this result seems acceptable. The relative standard deviation of retention times was in nearly all cases better than 0.2 %. This precision was useful when identifying unknown compounds.

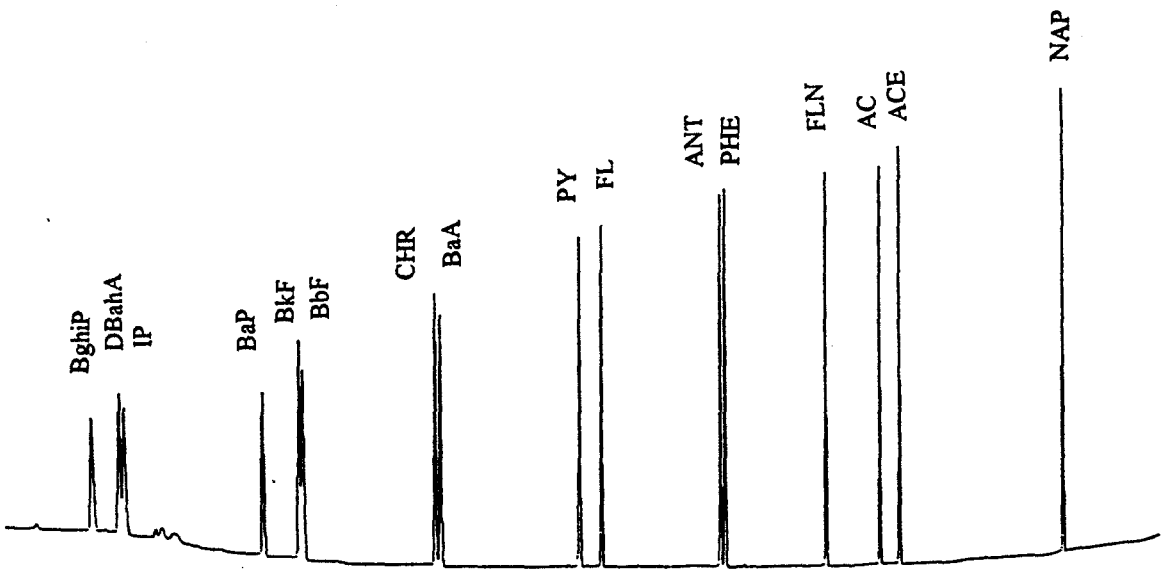

Figure 3. Standard mixture chromatogram.

Recovery efficiency

In order to detect any possible loss of sample during sample preparation (extraction, concentration, etc) the filter was seeded with a small amount of two PAH having different volatilities: ANT and DBahA. Results are shown in table 1. It can be seen that no significant amount of sample is lost during this manipulation.

PAH	Average recovery %	RSD n=3
ANT	93	3.8
DBahA	81	13

Table 1.

PAH	Average recovery %			RSD n=2	
	Filter	PUF	Total	Filter	PUF
ANT	6	88.5	94	0	2.4
DBahA	92	4.5	96	12	141

Table 2

Volatility experiment

The partial sublimation of SOC's during high volume sampling has been observed (5). The transfer of ANT and DBahA from the filter to the PUF back-up was studied.

Purified air was drawn through a seeded filter for 7.3 hours at 13 m3/h. Results are reported in table 2. It is shown that the partition between the filter and the PUF are in agreement with the volatility of the compounds. The total recovery is higher than 90%. At this stage one can see that an adsorbent back up is an appropiate solution for a better recovery. Nevertheless, as it will be shown later on, the over exposure in ambient air will lead to much different results.

Ozone artifact

Tropospheric ozone levels can be sufficient to react with PAH being collected in a high volume sampler. Recovery of sixteen PAH in an over exposure experiment with ozone was investigated. The experiment was conducted in the following way: filter was seeded with known amounts of PAH. The filter and the PUF were exposed to two purified air streams, one containing ozone and the other none. Results are reported in table 3. It is seen that all PAH more volatile than ANT are badly recovered. Three possible explanations are: some loss during sample manipulation (22), reaction with ozone or, more likely, due to the PUF breakthrough.

PAH	Purified Air without O3			Air with 168 ppbv O3		Air with 193 ppbv O3		Average
	Recovery %		Total	Recovery %		Recovery %		Total
	Filter	PUF	Recovery %	Filter	PUF	Filter	PUF	Recovery %
NAP	-	-	0	-	-	-	-	0
ACE	-	-	0	-	-	-	-	0
AC	-	-	0	-	-	-	-	0
FLN	-	45	45	-	30	-	50	40
PHE	5	70	75	5	75	5	75	80
ANT	16	73	89	10.5	37	10.5	37	47
FL	9	77	86	9	68	4.5	73	77
PY	9	73	82	9	63	4,5	68	73
BaA	68	18	86	50	9	36	9	52
CHR	95	-	95	109	-	92	-	107
BbF	87	-	87	96	-	87.5	-	92
BkF	92	-	92	100	-	92	-	96
BaP	86	-	86	31	-	17	-	24
IP	81	-	81	58	-	46	-	52
DBahA	79	-	79	83	-	75	-	79
BghiP	82	-	82	73	-	64	-	68

Table 3

PAH that are less volatile than ANT are well recovered in the filter and the PUF according to their molecular weight in the purified air experiment. However, when exposed to an ozone air stream, certain PAH (ANT, BaA, BaP and IP) are poorly recovered. One can explain this result by a possible ozonolysis especially if we take into account their reactivity.

Field measurements

Two campaigns were carried out in France, one in an urban site (Creil) and the other in a semi rural site (Marignane). As far as FID was used, and due to the complexity of a natural sample, the separation technique of aromatics and aliphatics was applied. Three organic compounds, namely ANT, DBahA and hexadecane were used as indicators in a range of concentration higher than that usually found in ambient air. Results and sampling conditions are indicated below:

Creil Public Square:

Sampling conditions: T: 22.8°C; RH%:39; Sampling time: 8h; Vol.:105.6 m3.
Aromatic Sampling Analysis

PAH	µg Filter	µg PUF	Total concentration µg/m3
NAP	-	-	-
ACE	-	-	-
AC	-	0.2	0.002
FLN	-	0.6	0.006
PHE	-	2	0.02
FL	-	0.5	0.005
PY	-	0.8	0.0075

Indicator recoveries

Indicators	Filter Recovery %		PUF Recovery %		Total
	Aromatics	Aliphatics	Aromatics	Aliphatics	Recovery %
ANT	-	-	24	-	24
DBahA	20	-	-	-	20
Hexadecane	-	1.3	-	4	5.3

Creil Road Side:

Sampling conditions: T: 19°C; RH%:41; Sampling time: 8h; Vol.:109.2 m3.

Aromatic Sampling Analysis

PAH	µg Filter	µg PUF	Total concentration µg/m3
NAP	-	0.5	0.0046
ACE	-	0.5	0.0046
AC	-	0.6	0.0055
FLN	-	2	0.018
PHE	-	6	0.06
FL	-	1.6	0.014
PY	-	2.3	0.02

Indicator recoveries

Indicators	Filter Recovery %		PUF Recovery %		Total
	Aromatics	Aliphatics	Aromatics	Aliphatics	Recovery %
ANT	-	-	40	-	40
DBahA	48.6	-	-	-	48.6
Hexadecane	-	2	-	5.4	7.4

Marignane (semi rural):

Sampling conditions: T: 33°C; RH%:37.5; Sampling time: 13h; Vol.:169 m3.
Ozone concentration: 108 ppb, peak 125 ppb.
Aromatic Sampling Analysis

All compounds investigated were at a concentration <0.001 µg/m3.

Indicator recoveries

Indicators	Filter Recovery %		PUF Recovery %		Total
	Aromatics	Aliphatics	Aromatics	Aliphatics	Recovery %
ANT	-	-	1	-	1
DBahA	59	-	-	-	59
Hexadecane	-	2	-	1.5	3.5

It is observed that organic compounds are in the PUF rather than in the filter according to the volatilisation artifact. One can expect that the extent of this artifact depends on temperature. There was a good separation of aliphatic and aromatic fractions. Aliphatics were not identified but chromatograms in figure 4 suggest that aliphatics can be a large part of the total organic matter in an airborne particle.

Some aromatics were identified and quantified including the indicators. The presence of PHE, FL and PY, especially in Creil Road Side, can be noticed. These PAH's are recognised as oil combustion indicators. At the period of the year in which the sampling took place (summer time) their origin can be attributed to diesel engine combustion only.

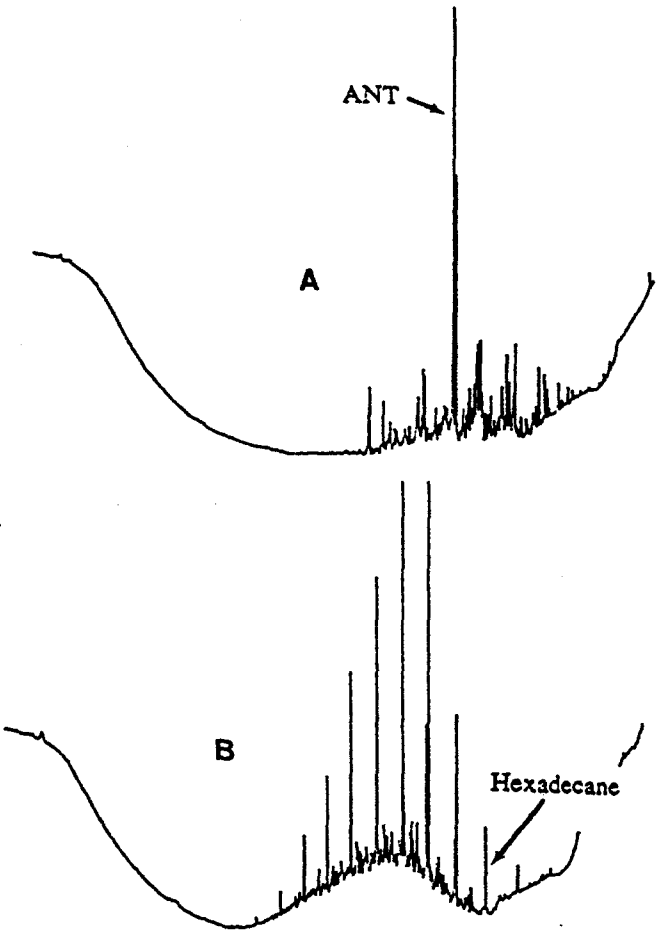

Figure 4. A: Aromatic fraction. B: Aliphatic fraction.

A very significant finding is that the over exposure of indicators in a natural and polluted air stream, leads to variable and poor recoveries. Many hypothesis can be advanced to explain this variance: chemisorption on carbonaceous particles, chemical reaction with co-pollutants (O3, NOx, SOC's, etc), PUF breaktrough volume modification, etc.

The remarkable inference of these results is that if unknown and incontrolable factors degrades high volume VOC's and SOC's sampling the problem of the reliability of such measurements is raised.

CONCLUSIONS

A systematic study of artifact formation, especially volatilisation and reaction with ozone for some PAH of atmospheric interest was performed. A purified air generator was used to show that there is a large transfer from the filter to the PUF back-up. The gas/solid partitioning in the troposphere cannot be obtained directly from the filter and the PUF recoveries.

The new air quality control directive specifies that PAH are one of the pollutants that shall be considered.

It appears that a number of complex and unmastered physicochemical phenomena take place during high volume sampling. Therefore further studies are merited in order to improve these type of techniques.

ACKNOWLEDGEMENTS

We particularly thank Mr Gwyn Jones for technical assistance.

REFERENCES

1. Mouvier G. La Pollution Atmosphérique. Collection Dominos. Ed. Flammarion. (1994).

2. Albaigés J., Bayona J.M., Fernández P., Grimalt J., Rosell A. and Simó R. Vapor-particle partitioning of hydrocarbons in western Mediterranean urban and marine atmospheres. *Mikrochim. Acta (Wien)*, **II**, 13-27 (1991).

3. Masclet P., Nikolau K. and Mouvier G. Identification des sources d'hydrocarbures aromatiques polycycliques particulaires dans l'atmosphère urbaine. In: *Proc. of the 3rd European Symposium*. April 1994, Varese, 616-626 (1984).

4. Journal Officiel des Communautés Européennes. Proposition de directive du Conseil concernant l'évaluation et la gestion de qualité de l'air ambiant. 94/C 216/04.

5. Finlayson-Pitts B.J. and Pitts J.N. Chemistry and mutagenic activity of airborne polycyclic hydrocarbons and their derivatives. In *Atmospheric Chemistry. Fundamentals and experimental techniques*. Wiley and Sons (ed.), a Wiley-Interscience Publication, 870-958 (1986).

6. Degobert P. Automobile et Pollution. Ed. Technip. (1992).

7. Grimmer G., Brune H., Dettbarn G., Jacob J., Misfeld J., Mohr U., Naujack K.-W., Timm J. and Wenzel-Hartung R. Relevance of polycyclic aromatic hydrocarbons as environmental carcinogens. *Fresenius J. Anal. Chem.*, **339**, 792-795 (1991).

8. EPA Method TO-13. The determination of Benzo(a)pyrene (BaP) and other polynuclear aromatic hydrocarbons (PAH's) in ambient air using gas chromatographic (GC) and high performance liquid chromatographic (HPLC) analysis.

9. Masclet P. and Mouvier G. La chimie atmosphérique des hydrocarbures aromatiques polycycliques. *Pollution Atmosphérique*. **Jan-Mars 1988**, 25-31 (1988).

10. Brorstrom E., Greenfelt P., Lindskog A. and Sjodin A. Transformation of polycyclic aromatic hydrocarbons during sampling in ambient air by exposure to different oxidized nitrogen compounds and ozone. Inst. Vatten Luftvaardsfork B IVL B 682, 22 p, (1982).

11. Lindskog A., Brorstrom-Lunden E. and Sjodin A. Transformation of reactive PAH on particles by exposure to oxidized nitrogen compounds. In: *Proc. Of the 3rd European Symposium*. April 1994, Varese, 264-274, (1984).

12. Davis C.S., Fellin P and Otson R. A review of sampling methods for aromatic hydrocarbons in air. *JAPCA*, **37** (12), 1397-1408 (1987).

13. Aceves M. and Grimalt J.O. Large and small particle size screening of organic compounds in urban air. *Atm. Env.*, **27B(2)**, 251-263 (1993).

14. Aceves M., Grimalt J.O., Sunyer J., Anto J.M. and Reed C.E. Identification of soybean dust as an epidemic asthma agent in urban areas by molecular marker and RAST analysis of aerosols. *J. Allergy Clin. Immunol.*, **88(1)**, 124-134 (1991).

15. Masclet P., Nikolau K. and Mouvier G. Optimisation d'une méthode d'échantillonage et d'analyse des hydrocarbures polyaromatiques dans l'air, sur des prélèvements d'une heure. *Pollution Atmosphérique*. **Juil-Sept**, 175-184 (1982).

16. Hart K.M., Lorne M.I. and Pankow J.F. High volume air sampler for particle and gas sampling. 1. Design and gas sampling performance. *Environ. Sci. Technol.* **26**, 1048-1052 (1992).

17. Hart K.M. and Pankow J.F. High volume air sampler for particle and gas sampling. 2. Use of back-up filters to correct for the adsorption of gas-phase polycyclic aromatic hydrocarbons to the front filter. *Environ. Sci. Technol.* **28**, 655-661 (1994).

18. Jaouen P., González-Flesca N. and Carlier P. A dynamic polluted atmosphere generator at low ppbv levels for validating VOC sampling methods. *Environ. Sci. Technol.* (In press).

19. Rosell A., Grimalt J.O., Rosell M.G., Guardino X. and Albaigés J. The composition of volatile and particulate hydrocarbons in urban air. *Fresenius J. Anal. Chem.* **339**, 689-698 (1991).

20. Aceves M., Grimalt J.O., Albaigés J., Broto F., Comellas L. and Gassiot M. Analysis of hydrocarbons in aquatic sediments. II. Evaluation of common preparative procedures for petroleum and chlorinated hydrocarbons. *Journal of Chromatography* **436**, 503-509, (1988).

21. Aceves M. and Grimalt J.O. Gas chromatographic screening of organic compounds in urban aerosols. Selectivity effects in semi-polar columns. *Journal of chromatography* **607**, 261-270 (1992).

22. González-Flesca N., Giraud F. and Mouvier G. Analyse des HAP dans les effluents industriels humides. *Pollution Atmosphérique*. **Jan-Mars**, 50-57, (1993).